TOWERS

© PROLYTE SALES BV

System Characteristics
The Prolyte tower systems comprise of four types of rigging towers and the MPT, ST and CT ground support systems. All tower systems are based on standard Prolyte truss. Extending your stock towards more complex systems like towers or roofs works like a step-by-step cost efficient investment. You only need to buy the additional parts, like base or top sections. This offers flexibility and optimum economic use of your trusses.

Rigging towers
The rigging towers are designed as stand alone tower to support PA clusters or audience lighting.
The rigging tower is available in types from 550 to 2300 kg allowable load and from 7,60 m to 16 m lifting height. Rigging towers can be built on any even surface and are specially designed for outdoor use.

Ground support towers
The ground support towers are designed to support a grid, without having the need for suspension points.
They can be used in a goalpost set-up (two towers) or as a ground support (three or more towers). The ground support towers are available in three types, the MPT Tower (to be used in combination with all trusses from the multi purpose series) the ST tower (to be used in combination with all the trusses from the heavy duty series) and the CT tower.
Ground support towers can be built on any even surface and are designed for indoor as well as outdoor use.

Coupling system
The RT-H30V, MPT and ST mast sections use the CCS6 system. The RT-36V, RT-S52SV, RT-B100RV and CT mast section use the CSS7 system. The Conical Coupling system allows fast, efficient and reliable coupling of your towers.

RT-H30V

Photo: Cazemier BV, The Netherlands

Photo: JSA, Russian Federation

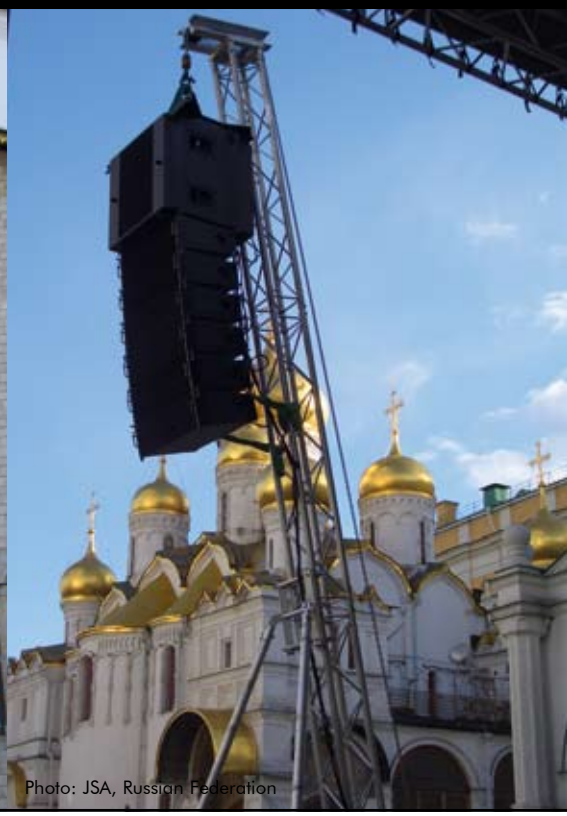
Photo: JSA, Russian Federation

The light duty RT-H30V version has a loading capacity of 800 kg and a maximum lifting height of 7.60 m. The RT-H30V is based on H30V truss with stabilizers of 60 mm tube. It has a self-weight of 260 kg.

The legs of the V-shaped base can be levelled by means of screw jacks that attach to the side of the legs. After the base is placed, the mast can be build and erected, using the hinges on the base.

The mast should be stabilised by means of the braces, which fix to the legs. After the system levelled and ballast is applied, the load can be hoisted in position.

The relatively small measurements make it suitable for all applications, like outdoor events, concerts, shopping mall entrance halls, exhibition area's and theme parks.

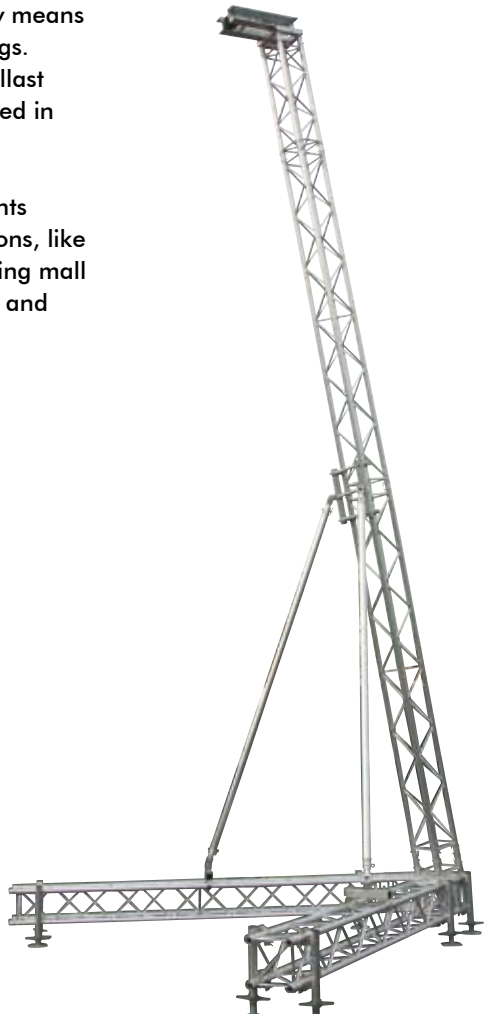

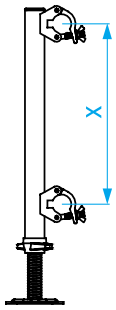

ACC-SPIN-ATT-30
spindle attachtment 30 truss, x = 239 mm

ACC-SPIN-LAY/40
spindle to be ordered seprately

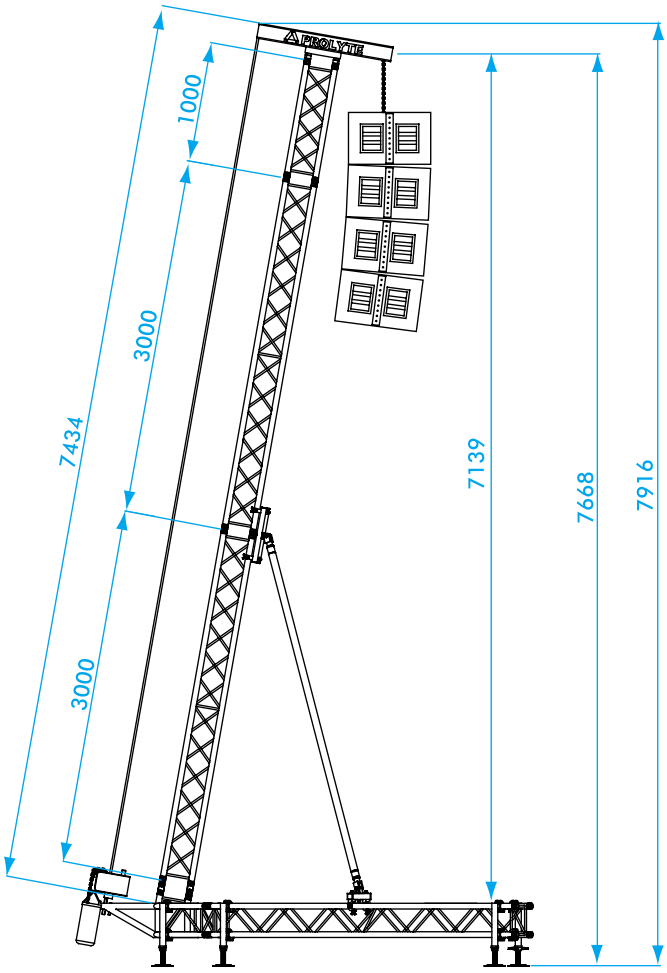

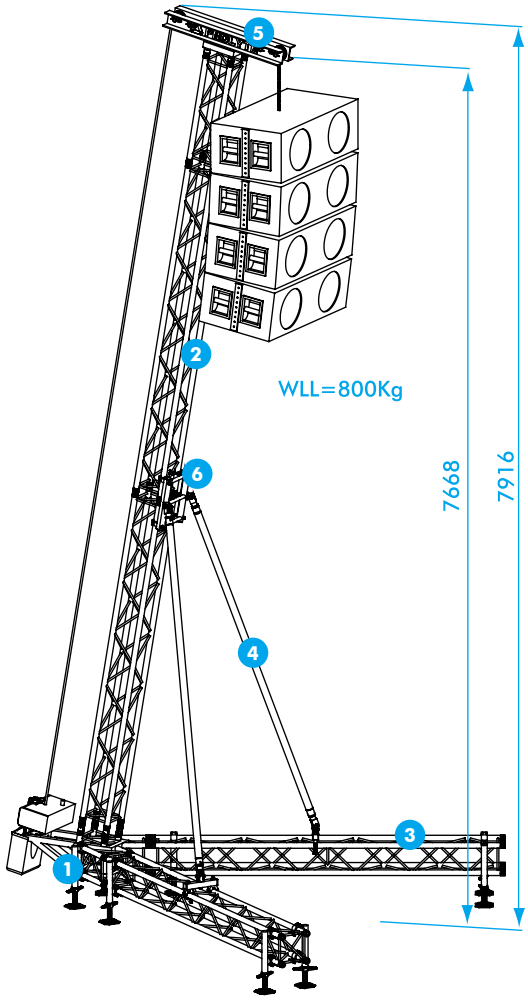

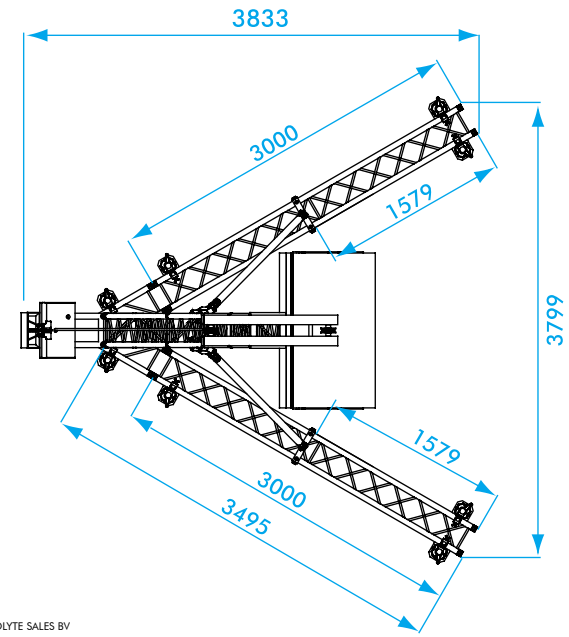

©PROLYTE SALES BV

LEGENDA		
1	CORNER	RT-H30V-C003
2	MAST SECTION	H30V-L•••
3	LEG SECTION	H30V-L•••
4	STABILISER SECTION	TUBE 60 MM
5	TOP SECTION	RT-009H
6	MAST ATTACHMENT	RT-STAB-H30V-TOP

TECHNICAL SPECIFICATIONS RT-H30V-0,8T	
max. overall height	7,92 m
max lifting height	7,60 m
max. loading capacity	800 kg (1760 lbs)
max. surface front load	2,5 m^2
max. surface side load	1,25 m^2
truss sections	H30V
braces	60 mm
coupling system	CCS6 series
alloy alu parts	EN-AW 6082 T6
ballast	100 kg
max. windspeed`	20,7 m/s (46,3 mph)
system weight	260 kg

RT-S36V

Photo: Prolyte Sales BV, The Netherlands

The medium duty RT-S36V version has a loading capacity of 1000 kg and a maximum lifting height of 9,25 m. The RT-S36V is based on S36V truss with stabilizers of 60 mm tube. It has a self-weight of 415 kg.

The legs of the V-shaped base can be levelled by means of screw jacks that attach to the side of the legs. After the base is placed, the mast can be built and erected, using the hinges on the base.

The mast should be stabilised by means of the braces, which fix to the legs. After the system levelled and ballast is applied, the load can be hoisted in position.

The relatively small measurements make it suitable for all applications, like outdoor events, concerts, shopping mall entrance halls, exhibition area's and theme parks.

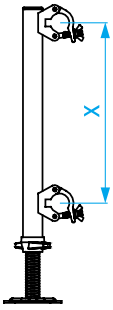

ACC-SPIN-ATT-36
spindle attachtment 36 truss, x = 299 mm

ACC-SPIN-LAY/40
spindle to be ordered seprately

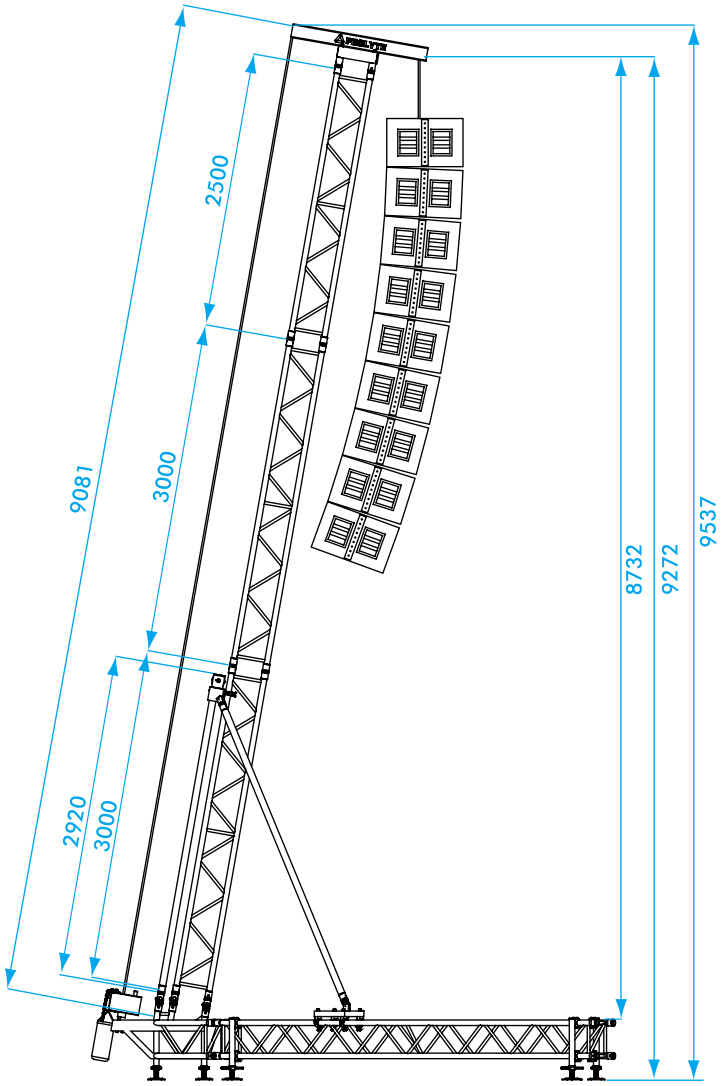

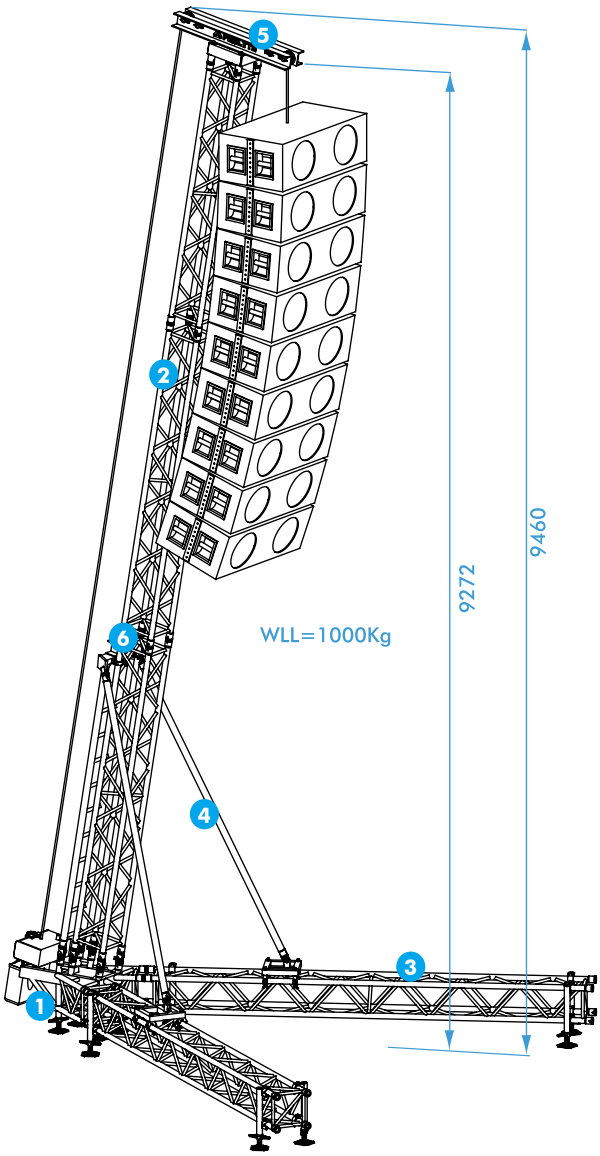

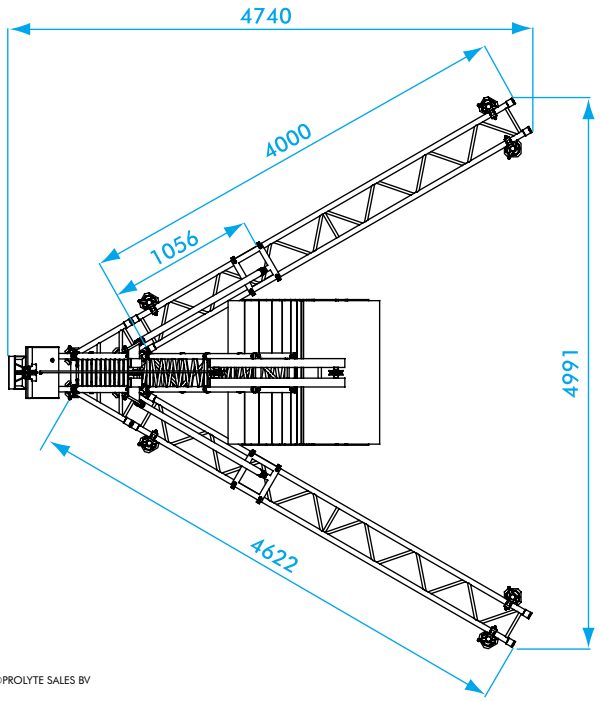

©PROLYTE SALES BV

LEGENDA		
1	CORNER	RT-S36V-C003
2	MAST SECTION	S36V-L300
3	LEG SECTION	S36V-L300
4	STABILISER SECTION	TUBE 60 MM
5	TOP SECTION	RT 009-S36V
6	MAST ATTACHMENT	RT-STAB-S36V-REAR

TECHNICAL SPECIFICATIONS RT-S36V-1T	
max. overall height	9.46 m
max lifting height	9.25 m
max. loading capacity	1000 kg (2200 lbs)
max. surface front load	5 m^2
max. surface side load	2,5 m^2
truss sections	S36V
braces	60 mm
coupling system	CCS7 series
alloy alu parts	EN-AW 6082 T6
ballast	480 kg
max. windspeed`	20,7 m/s (46,3 mph)
system weight	415 kg

RT-S52SV

Photo : ModifiC, Russian federation
Project : RT Sound - Nokia Snowboard

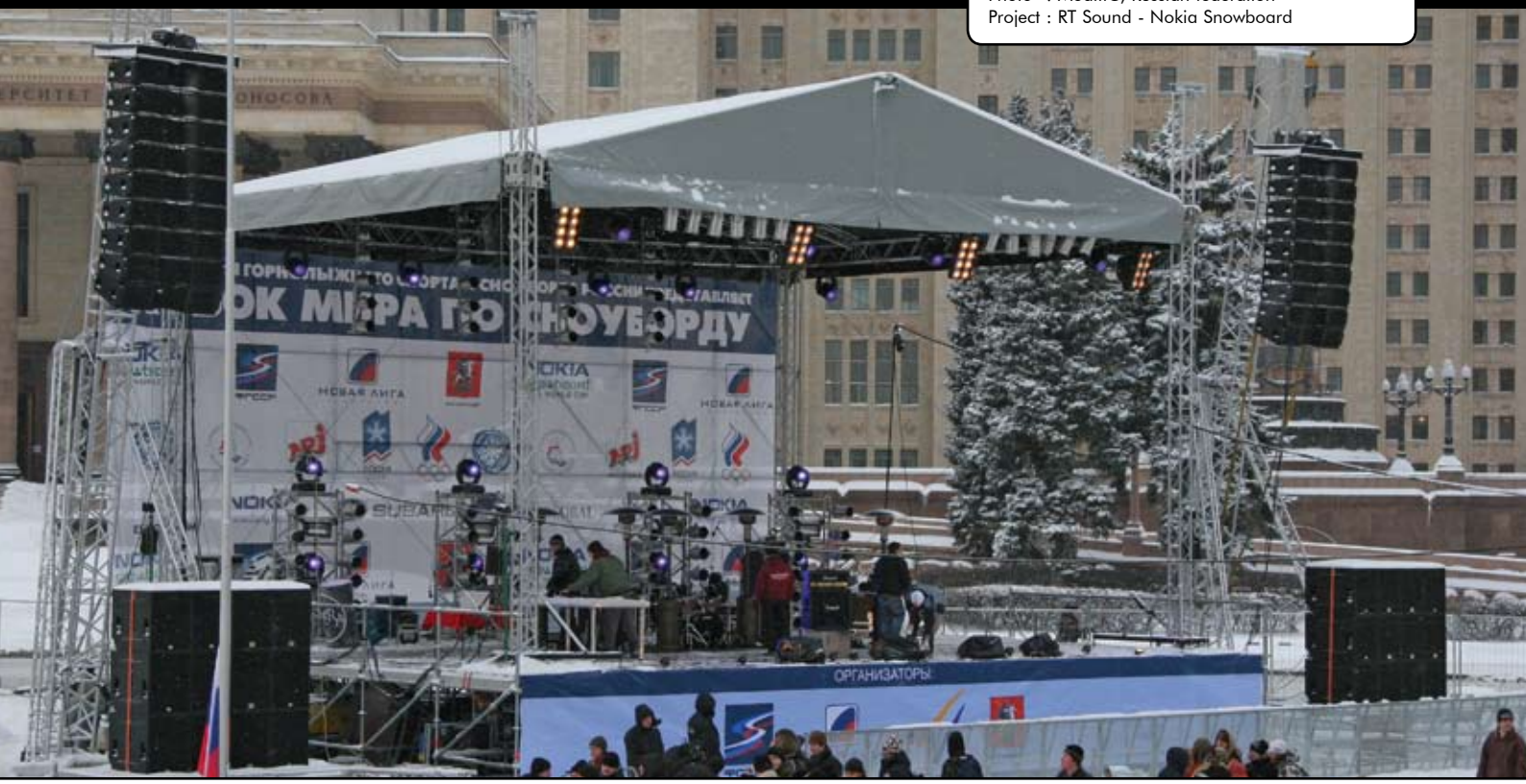

The medium to heavy duty RT-S52SV version has a loading capacity of 1400 to 2900 kg and a maximum lifting height of 12,95 m (please refer to the technical specifications table for further details). The RT-S52SV is based on S52SV truss with stabilizers of H30D truss. It has a self-weight of 463-520 kg.

The legs of the V-shaped base can be levelled by means of screw jacks that attach to the side of the legs. After the base is placed, the mast can be built and erected, using the hinges on the base. The mast should be stabilised by means of the braces, which fix to the legs. After the system levelled and ballast is applied, the load can be hoisted in position.

The RT-S52SV rigging tower is the ideal solution for medium- to large-scale events where flexibility counts, like; concerts areas or public manifestations. The RT-S52SV can be converted from one type to another by simply adjusting the length of the mast.

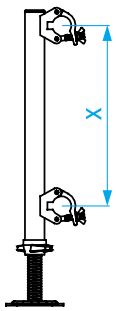

ACC-SPIN-ATT-52
spindle attachtment 52 truss, x = 470 mm

ACC-SPIN-LAY/60
spindle to be ordered seprately

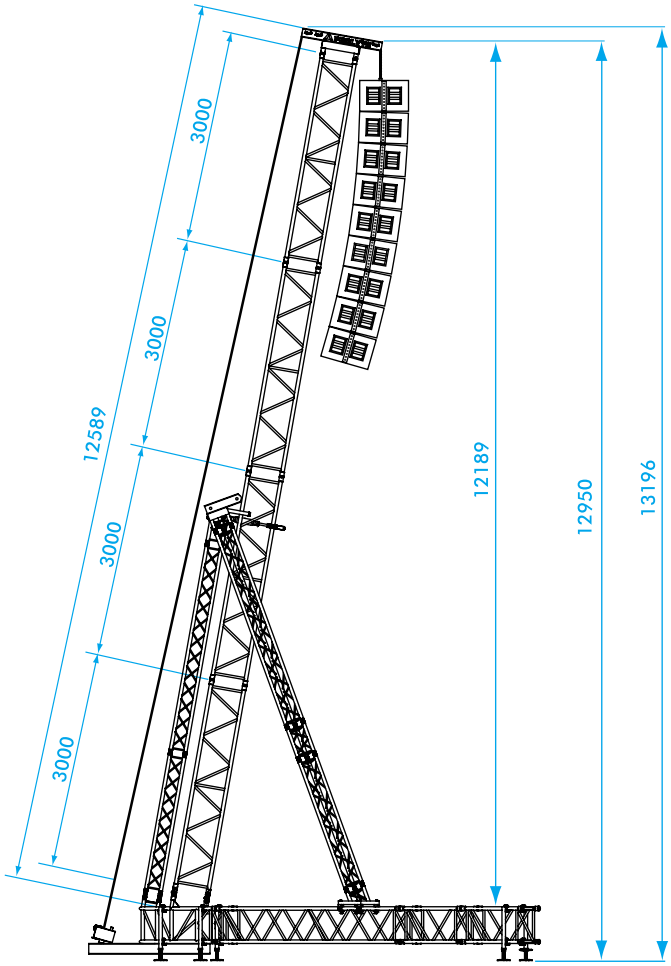

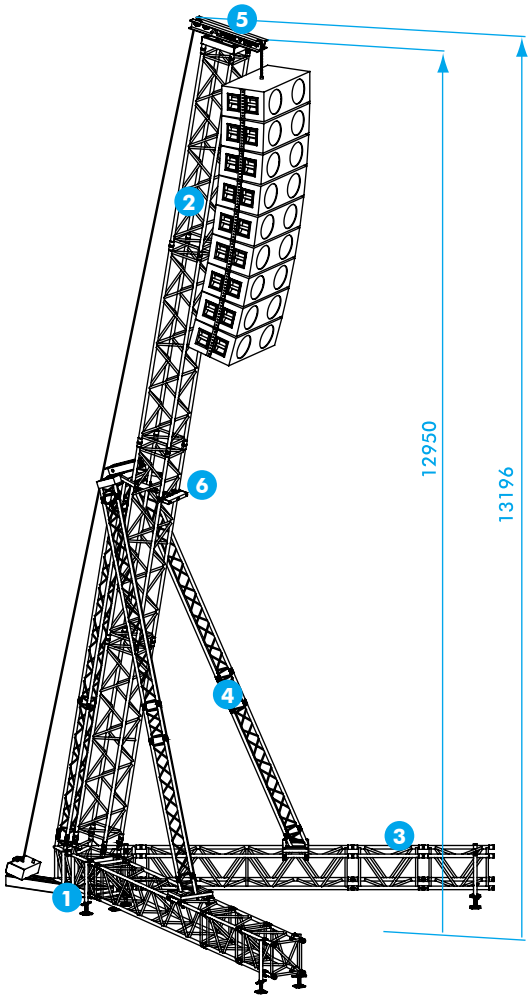

LEGENDA	
1 CORNER	RT-S52SV-C003
2 MAST SECTION	S52SV-L300
3 LEG SECTION	S52SV-L300
4 STABILISER SECTION	H30D-L•••
5 TOP SECTION	RT-009S
6 MAST ATTACHMENT	RT-TOP

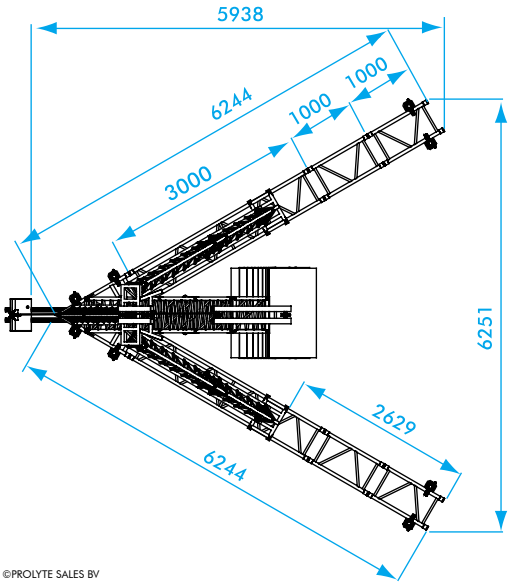

©PROLYTE SALES BV

TECHNICAL SPECIFICATIONS	RT-S52SV-1,4T	RT-S52SV-2,0T	RT-S52SV-2,9T
max. overall height	13,15 m	11,18 m	10,19 m
max lifting height	12,95 m	10,95 m	9,95 m
max. loading capacity	1400 kg (3080 lbs)	2050 kg (4510 lbs)	2900 kg (6380 lbs)
max. surface front load	5 m^2	7,5 m^2	10 m^2
max. surface side load	2,5 m^2	3,75 m^2	5 m^2
truss sections	S52SV	S52SV	S52SV
braces	H30D	H30D	H30D
coupling system	CCS7 series	CCS7 series	CCS7 series
alloy alu parts	EN-AW 6082 T6	EN-AW 6082 T6	EN-AW 6082 T6
ballast	150 kg	200 kg	200 kg
max. windspeed	20,7 m/s (46,3 mph)	20,7 m/s (46,3 mph)	20,7 m/s (46,3 mph)
system weight	520 kg (1144 lbs)	495 kg (1089 lbs)	463 kg (1018 lbs)

RT-B100RV

Photo : Italstage, Italy

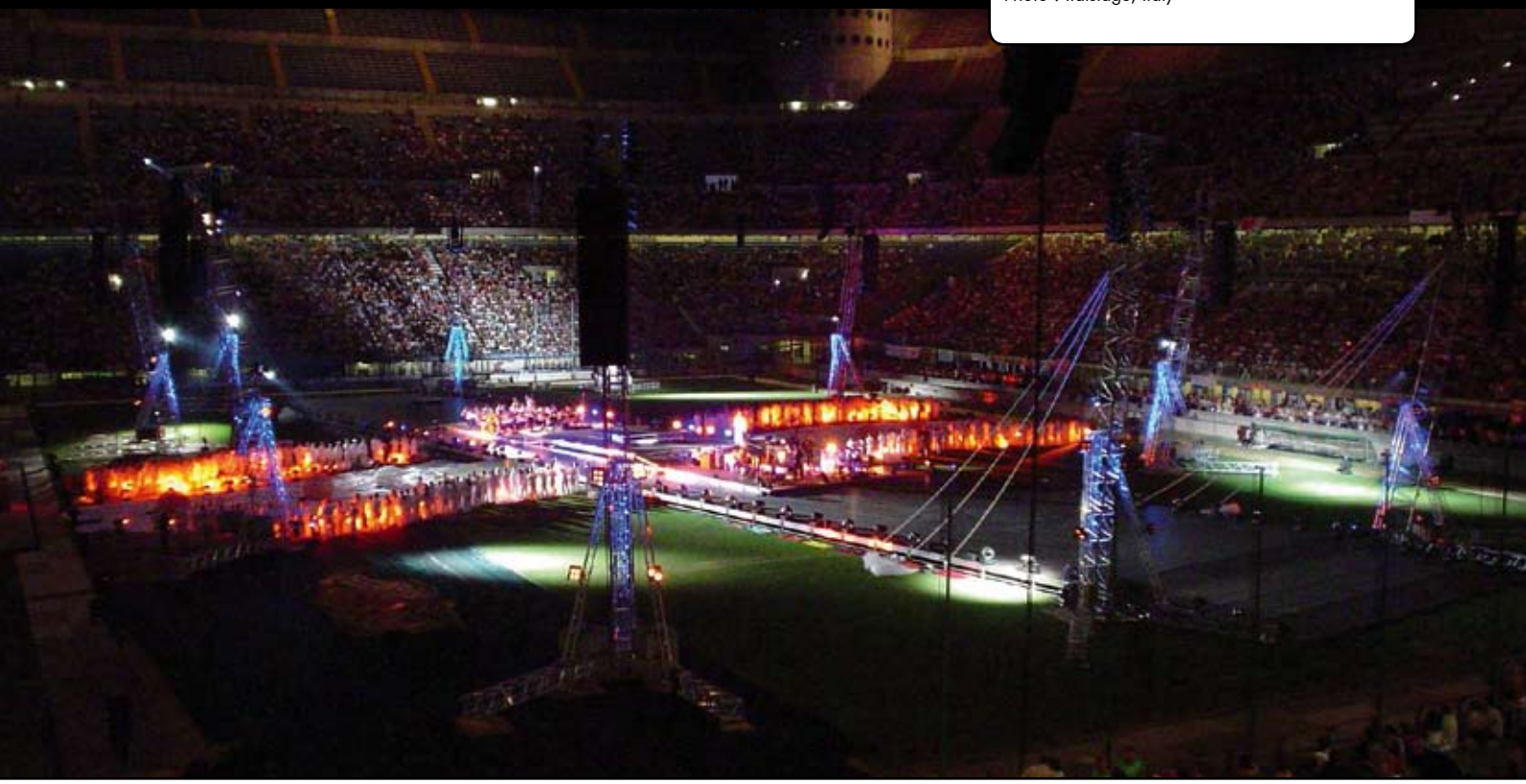

The heavy duty RT-B100RV version has a loading capacity of 2300 kg and a maximum lifting height of 15,95 m. The RT-B100RV is based on B100RV truss with stabilizers of H30D truss. It has a self-weight of 695 kg.

The legs of the V-shaped base can be levelled by means of screw jacks that attach to the side of the legs.
After the base is placed, the mast can be built and erected, using the hinges on the base. The mast should be stabilised by means of the braces, which fix to the legs.

After the system levelled and ballast is applied, the load can be hoisted in position. The sturdy and stable RT-B100RV rigging tower a safe and suitable solution for all sorts of surroundings, like outdoor events, public manifestations and large arenas.

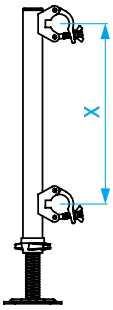

ACC-SPIN-ATT-52
spindle attachtment 52 truss, x = 470 mm

ACC-SPIN-LAY/60
spindle to be ordered seprately

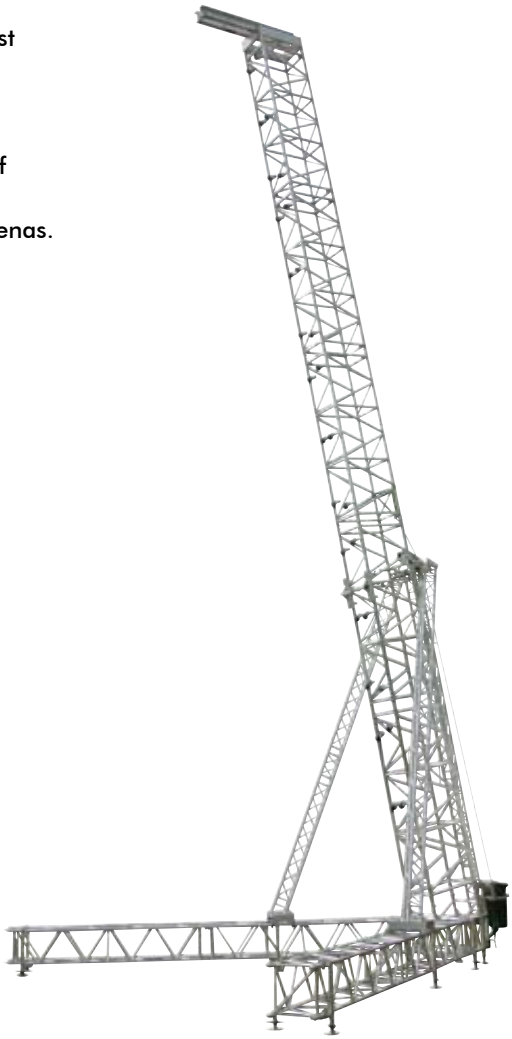

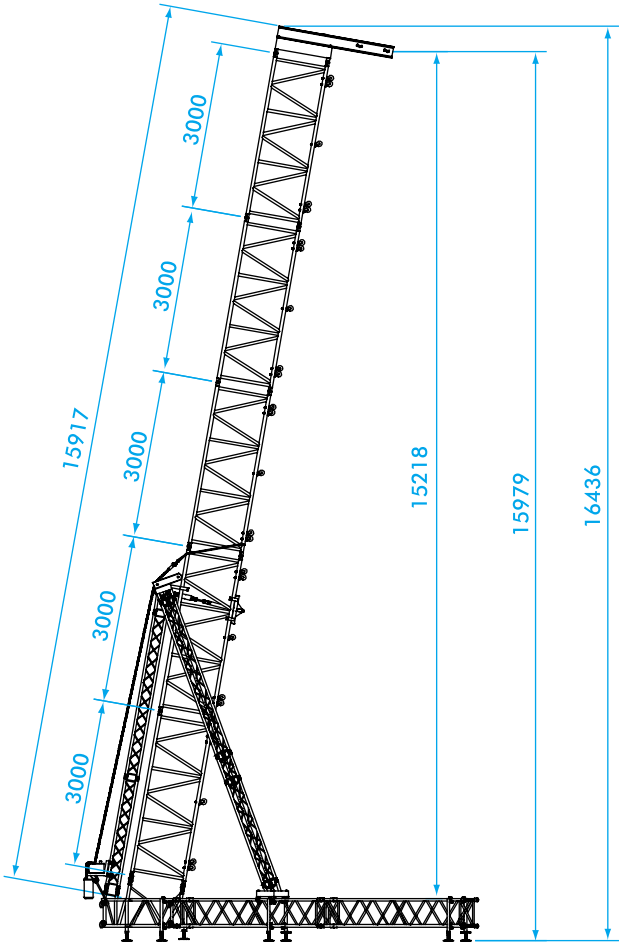

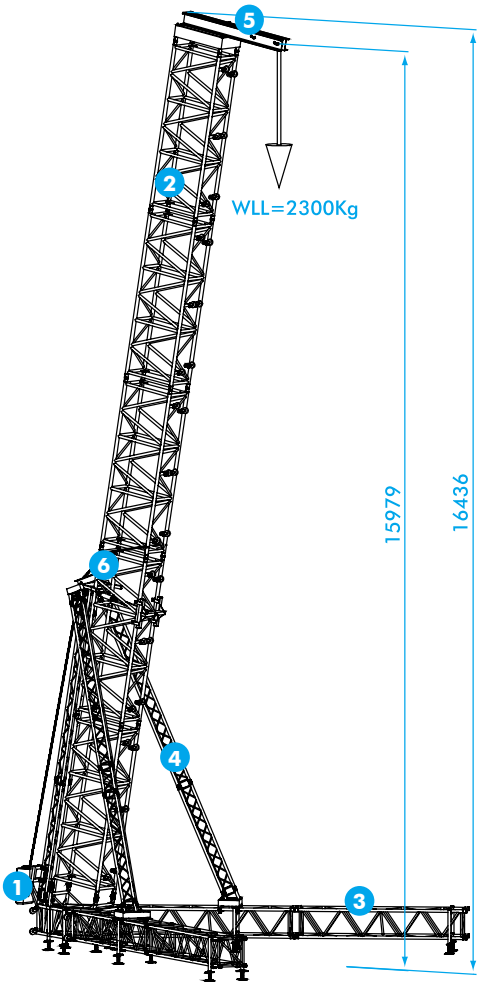

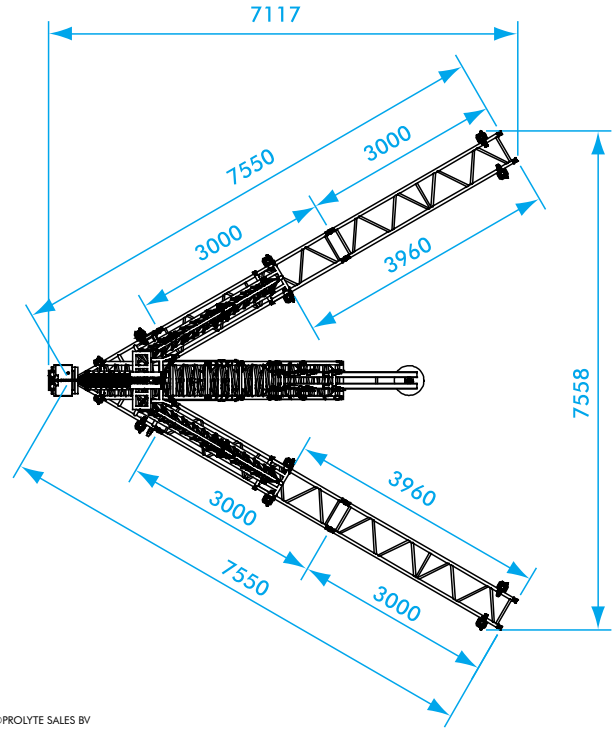

©PROLYTE SALES BV

LEGENDA		
1	CORNER	RT-B100RV-C003
2	MAST SECTION	B100RV-L300
3	LEG SECTION	S52SV-L•••
4	STABILISER SECTION	H30D-L•••
5	TOP SECTION	RT-009-B100RV
6	MAST ATTACHMENT	RT-TOP

TECHNICAL SPECIFICATIONS RT-B100RV-2,3T	
max. overall height	16,22 m
max lifting height	15,95 m
max. loading capacity	2300 kg (5060 lbs)
max. surface front load	11 m^2
max. surface side load	5,5 m^2
truss sections	B100RV / S52SV
braces	H30D
coupling system	CCS7 series
alloy alu parts	EN-AW 6082 T6
ballast	915 kg
max. windspeed`	20,7 m/s (46,3 mph)
system weight	695 kg (1530 lbs)

MPT TOWER

Photo : JSA, Russian Federation

The Multi purpose MPT tower has a loading capacity of 1000 kg (750 kg if used in combination with a hand winch) and maximum lifting height of 7 m.
The MPT tower is based on H30V truss and uses a sleeve block that is suitable to fit any of the 30 or 40 series trusses to all four sides, by means of bolted, either male or female CCS6 couplers. In combination with an adapter plate it's also possible to use the sleeve block with either S36R or S36V truss. The MPT tower has a self-weight of 115 kg.

The MPT sleeve block is a fully bolted structural element, making it much stronger and more precise than conventional welded versions. The top section and base section can facilitate the use of either a hand winch or a chain hoist.

The MPT tower is a cost effective investment, you only have to buy the special parts if you want to extend your truss system with towers.

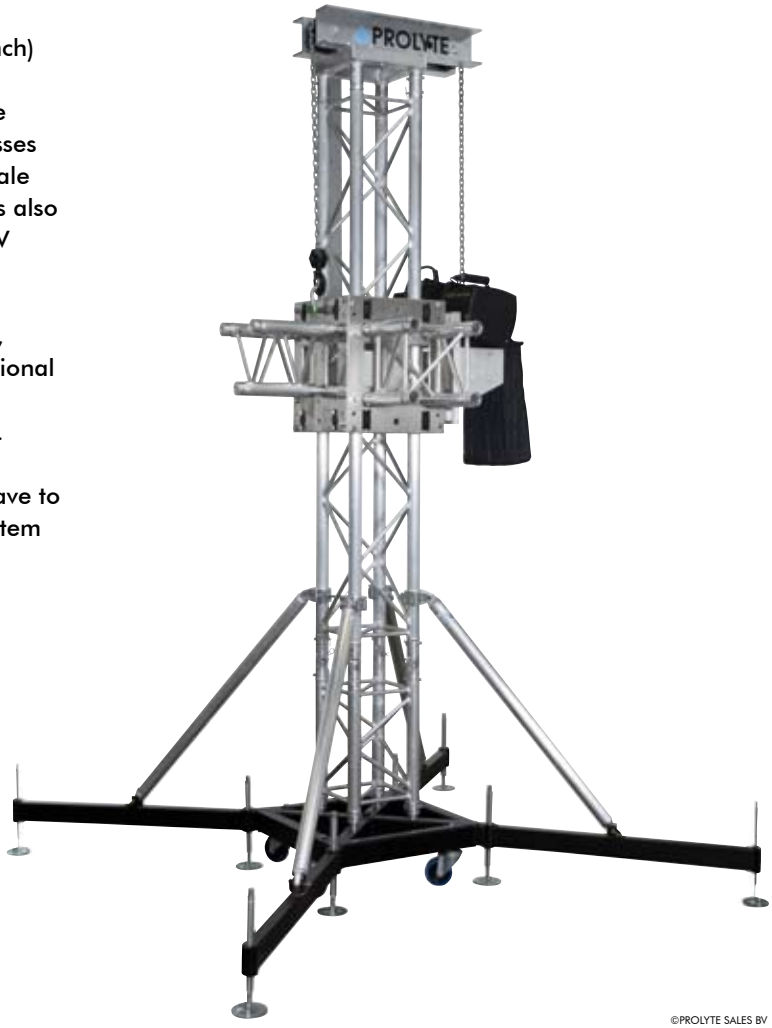

©PROLYTE SALES BV

TECHNICAL SPECIFICATIONS MPT TOWER

max. height	7,50 m
max. loading capacity	1000 kg
max. load handwinch	750 kg
type mast sections	H30V
sleeve block suitable for truss-series	X or H30D, X or H30V, X or H40D and X or H40V, S36R, S36V
alloy alu parts	EN-AW 6082 T6
coupling system tower	CCS6 series
self weight	115 kg

ALLOWABLE CANTILEVER LOAD FOR MPT-010 SLEEVE BLOCK

lenght (L)	H40V X40V PL (kg)	H40D X40D PL (kg)	H30V X30V PL (kg)	H30D X30D PL (kg)
0,5	400	160	400	130
1	200	80	200	65
1,5	130	50	130	40
2	100	40	100	30

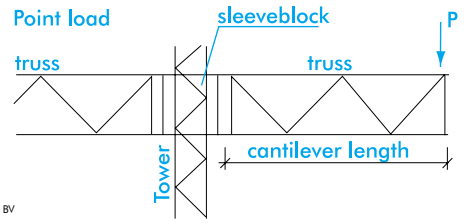

©PROLYTE SALES BV

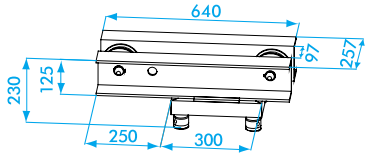

Top section MPT-009
pulley suitable for 6mm chain of 1 ton hoistor
8 mm steelwire.

©PROLYTE SALES BV

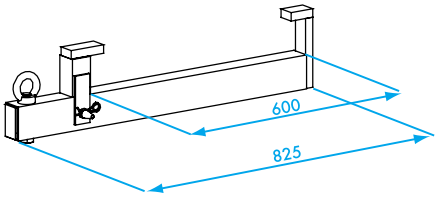

MPT-041

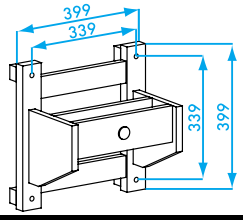

MPT-042

©PROLYTE SALES BV

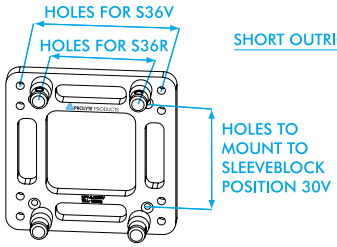

Adapter plate for S36R or S36V truss WLL 1000kg

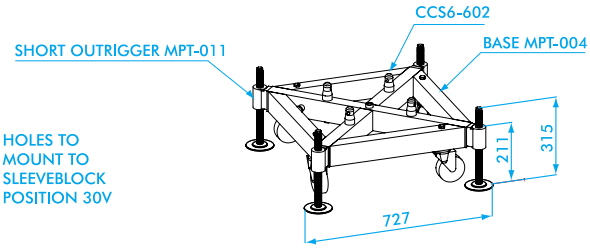

MPT-004 Base

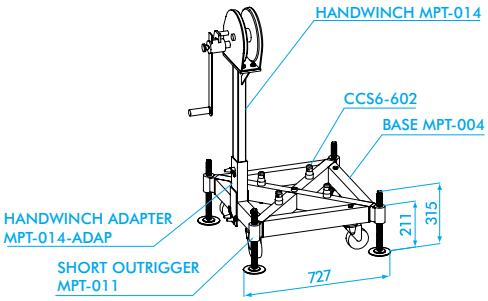

MPT-014 Handwinch

©PROLYTE SALES BV

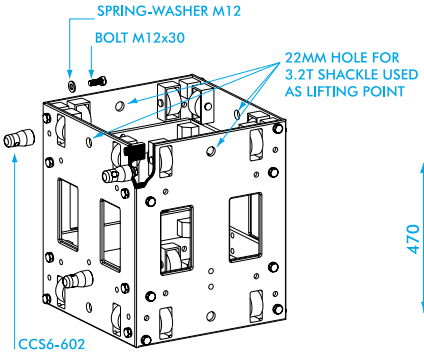

Sleeveblock MPT-010

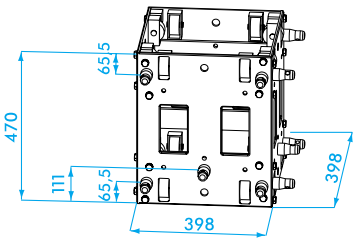

Sleeveblock MPT-010

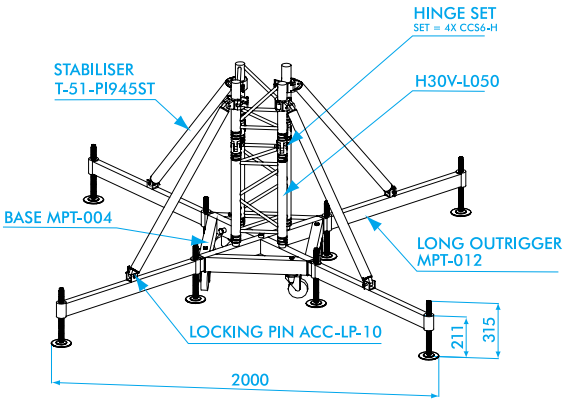

MPT-004 Base with MPT-012 long outriggers

©PROLYTE SALES BV

MPT TOWER

1 The black coated, steel base (MPT-004) is equipped with 4 castors and four half conical couplers (CCS6-602) for the attachment of the mast section. The base can be used with either short outriggers (MPT-011) or long outriggers (MPT-012)

2 To secure the outriggers within the base, a trigger pin is placed on the inside of the baseframe. Pull the pinn outwards when mounting the outriggers.

3 Disassemble the hinge-set, mount the half hinges to both the mast sections (H30V truss). Male and female connections should be mounted diagonally (as shown in the picture), in order to facilitate the erection the mast.

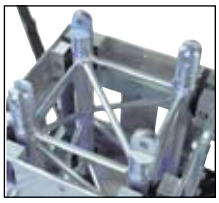

4 A complete mounted hinge set. First locate the truss pins to one side, the truss now works as a hinge and can be erected easily. Then locate the remaining truss-pins in the other side to fix the mast into position.
A complete hinge-set consists of 4 x CCS6-H (hinge-set MPT•ST tower)

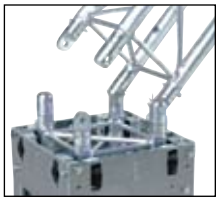

5 Unscrew the screwjacks in the outriggers, make sure that the castors of the base are free of any load. The complete load of the base should be supported by the screwjacks. Level the base by adjusting the screwjacks. The base must be perfectly levelled before the mast is erected.
Long outriggers are needed for structures with three towers or less.

6 To use the MPT tower in combination with a chain hoist, Prolyte provide the motor attachment (MPT-041). This supplementary component can be attached to the base and has a fixing for the chain hoist hook.

7 The sleeve block is lifted by use of a chain hoist or a hand winch. Chain hoists can be mounted with the help of the motor attachment (MPT-042). Chain hoists can also be mounted to the grid and sleeveblock. WLL 1000 kg.

8 Prolyte advises that during storage and transportation the MPT towers are mounted as an assembly of the following components; base section, 50 cm mast section, sleeveblock, hinges and top section.
This combination facilitates fast, efficient loading and building of the towers (size 60 x60 x115 cm, weight +/- 115kg).

ST TOWER HEAVY DUTY TOWER SYSTEM

Photo : Enttech, Greece
Project : Voala Beach, Athens, Greece

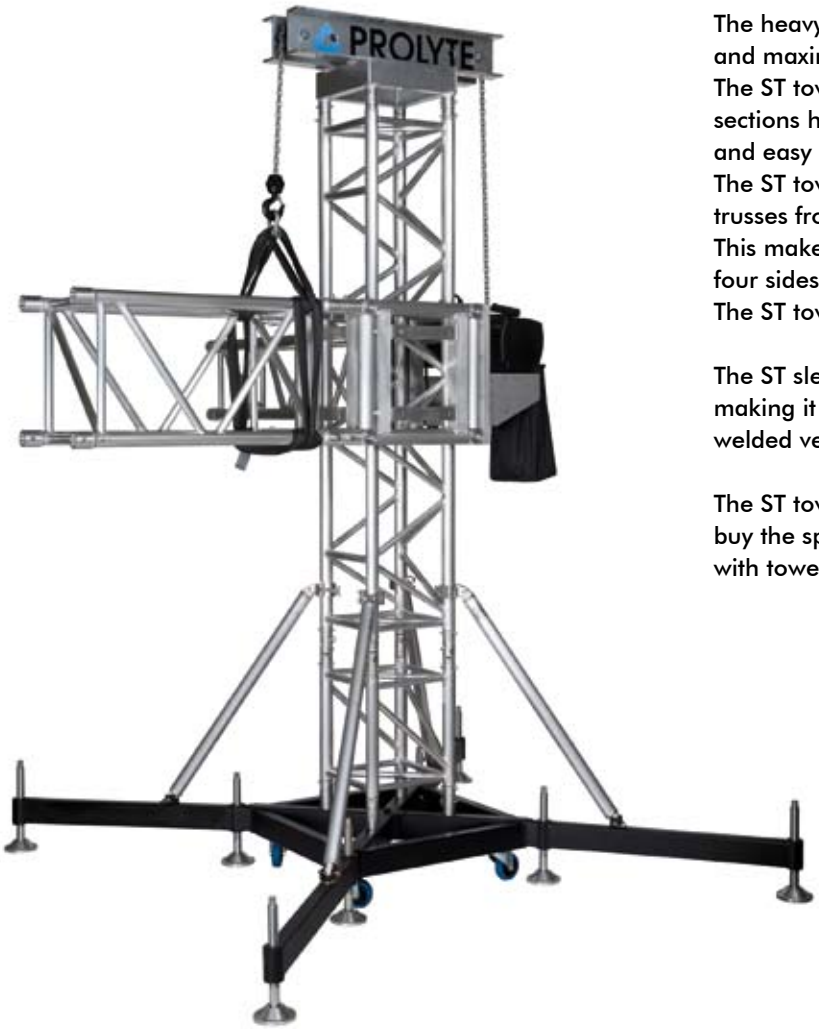

The heavy duty ST tower has a loading capacity of 2000 kg and maximum lifting height of 12 m.
The ST tower is based on S40T mast sections, these mast sections have a one sided horizontal bracing to facilitate safe and easy climbing of the towers.
The ST tower uses several sleeve blocks that combine all the trusses from the S and B series (or combinations).
This makes it possible to fit any of the S-series trusses to all four sides, by means of bolted female CCS7 couplers.
The ST tower has a self-weight of 120 kg.

The ST sleeve block is a fully bolted structural element, making it much stronger and more precise than conventional welded versions.

The ST tower is a cost effective investment, you only have to buy the special parts if you want to extend your truss system with towers.

TECHNICAL SPECIFICATIONS ST TOWER

max. height	12,00 m
max. loading chainhoist*	2000 kg
type mast sections	S40T
sleeveblock suitable for truss-series	S36R•V, S52F•V, S66R•V, S100F and B100RV (with various sleeveblocks)
alloy alu parts	EN-AW 6082 T6
main tubes mast sections	50 x 4 mm
braces mast sections	25 x 3 mm
coupling system tower	CCS6 series
self weight	120 kg

*) to be used with chainhoist only.

ALLOWABLE CANTILEVER LOAD FOR ST-010 SLEEVE BLOCK

lenght (L)	S52V/SV PL (kg)	S52F PL (kg)
1	1753	1414
1,5	1489	977
2	1288	736
2,5	1130	581
3	1002	472
3,5	895	389
4	804	324
4,5	726	271
5	658	226
5,5	597	188
6	543	153

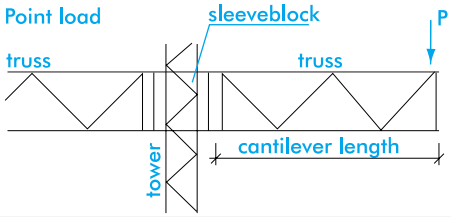

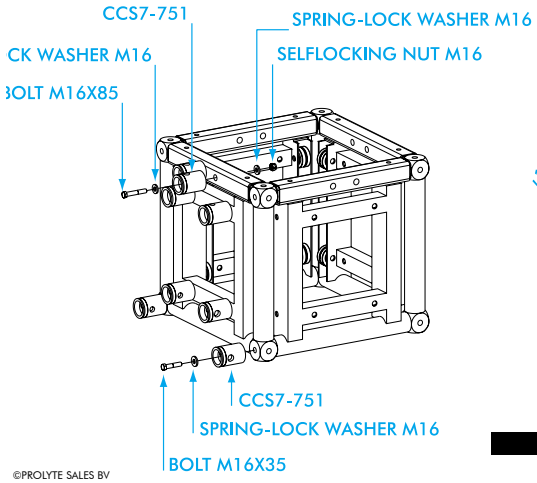

©PROLYTE SALES BV

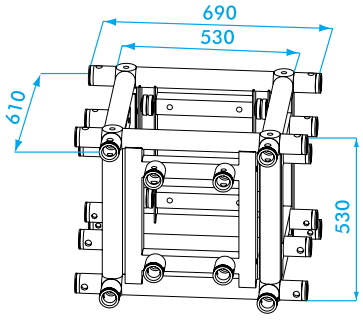

Sleeveblock ST-010 for S36R and S52V

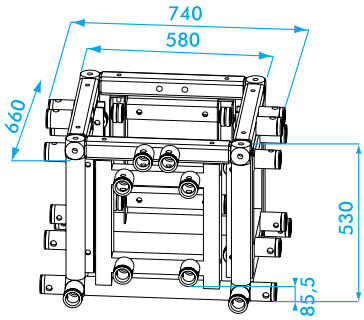

Sleeveblock ST-010 for S36R and S52F

ST Help erecting system

The ST-HELP can be used to erect the ST towers.
Use with a 1 ton electrical chain hoist.
Attach to truss by means of a ratchet strap.
Read manual first!

©PROLYTE SALES BV

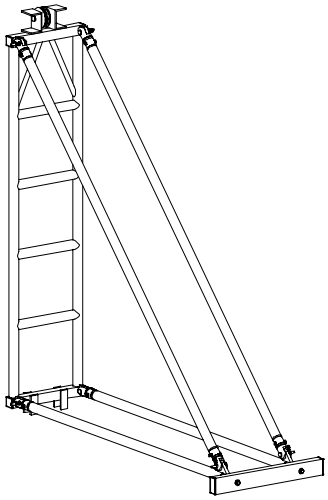

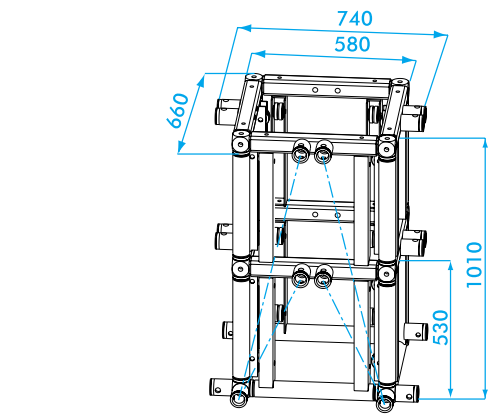

Sleeveblock ST-010 for S52F / S100F / B100RV

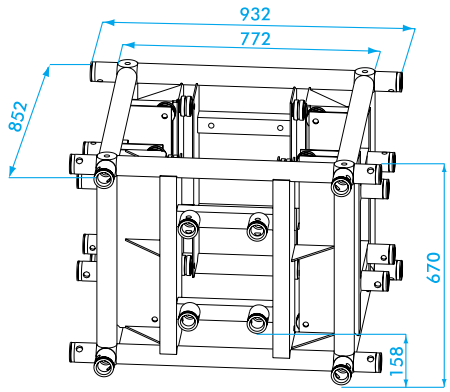

Sleeveblock ST-010 for S36R / S66V

©PROLYTE SALES BV

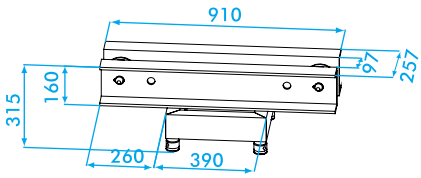

Top section ST-009

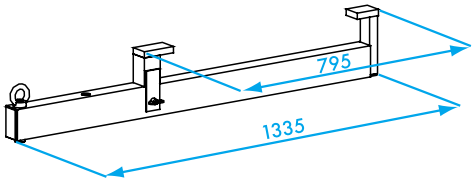

ST-041

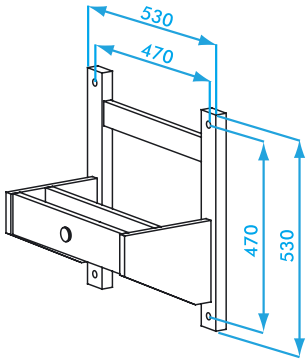

ST-042

ST Motor attachment. WLL 1000 kg, available for all S-series sleeve blocks.

©PROLYTE SALES BV

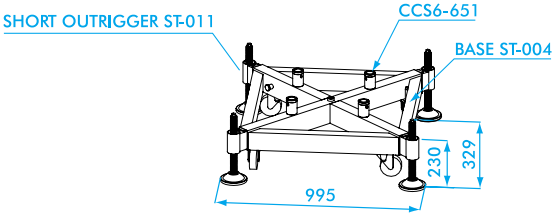

ST-004 Base with ST-011 short outriggers

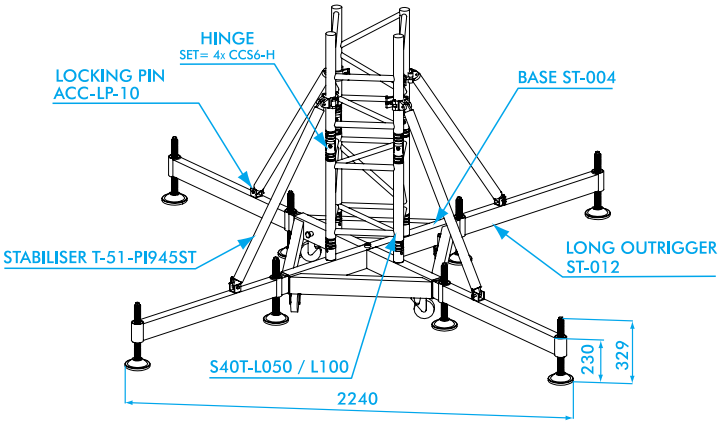

ST-004 Base with ST-012 long outriggers

©PROLYTE SALES BV

S40T SERIES STANDARD AVAILABLE LENGTHS									
Meters	0,5	1,00	1,50	2,00	2,50	3,00	3,50	4,00	AVARAGE WEIGHT PER METER = 10,3 KG
Feet	1,64	3,28	4,92	6,56	8,20	9,84	11,48	13,12	AVARAGE WEIGHT IN POUNDS PER FEET = 6,93 LBS

ST TOWER HEAVY DUTY TOWER SYSTEM

1 The black coated, steel base (ST-004) is equipped with 4 castors and four female couplers (CCS6-651) for attachment of the mast section. In most cases, the first mast section can be 50 cm long, however, when S66 or S100 truss is used in the grid a mast section of 100 cm should be used. The base can be used with either short outriggers (ST-011) or long outriggers (ST-012).

2 To secure the outriggers within the base, a trigger pin is placed on the inside of the base frame. Pull the pin outwards when mounting the outriggers.

3 The ST tower can only be used with a chain hoist.
The hoist can be attached in two ways, see pictures 7 and 8.

4 Disassemble the hinge-set, mount the half hinges to both the mast sections (S40T truss). Male and female connections should be mounted diagonally (as shown in the picture), in order to facilitate the erection the mast.

5 A complete mounted hinge-set. First locate the truss-pins to one side, the truss now works as a hinge and can be erected easily. Then locate the remaining truss-pins in the other side to fix the mast into position.
A complete hinge-set consists of 4 x CCS6-H (hinge-set MPT•ST tower)

6 Unscrew the screwjacks in the outriggers, making sure that the castors of the base are free of any load. The complete load of the base should be supported by the screwjacks. Level the base by adjusting the screwjacks. The base must be perfectly levelled before the mast is erected. Long outriggers are needed for structures with three towers or less.

7 To use the ST tower in combination with a chain hoist, Prolyte provide the motor attachment (ST-041). This supplementary component can be attached to the base and has a fixing for the chain hoist hook. WLL 1000 kg

8 Chain hoists can be attached by use of the motor attachment (ST-042).
Chain hoists can also be mounted to the grid and sleeve block.

9 Prolyte advises that during storage and transportation the ST towers are mounted as an assembly of the following components; base section, 50 cm mast section, sleeve block and top section. This combination facilitates fast, efficient loading and building of the towers (size 80 x 80 x 120cm, weight +/- 120 kg).

CT TOWER

Photo : ModifiC, Russian Federation
Project : Russian telecommunication company "Caravan"

The heavy-duty CT tower has a loading capacity of 5000 kg and maximum lifting height of 20 m. The CT tower is based on C52T mast sections, these mast sections have a one sided horizontal bracing to facilitate safe and easy climbing of the towers. C52T truss is constructed of main tubes of 60 x 6 mm and diagonals of 30 x 3/48 x 3 mm. Use the CCS7 coupling system with the CCS7-704 or Z-CCS7-703-C52T shortened spigot pin. The latter one is yellow pacifated to be easily distinguished from regular pins.

The base section of the CT tower is similar to the ST tower; outside dimensions and set up are the same. Extra spindles are added to the base section to absorb the extra forces resulting from a higher loading capacity of the tower. Existing ST base sections can be upgraded to accommodate CT towers on request.

The CT tower uses several sleeve blocks that combine all the trusses from the S and B series (or combinations).
This makes it possible to fit any of the S-series trusses to all four sides, by means of bolted female CCS7 couplers. Outside dimensions of the CT sleeve block are the same as the ST sleeve block; you are able to combine both in one grid. The CT tower has a self-weight of 120 kg.

The CT sleeve block is a fully bolted structural element, making it much stronger and more precise than conventional welded versions.

The CT tower is a cost effective investment, you only have to buy the special parts if you want to extend your truss system with towers.

CT TOWER

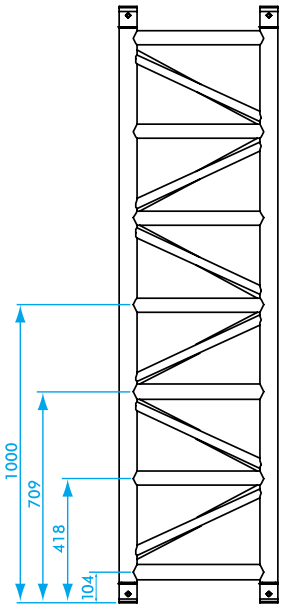

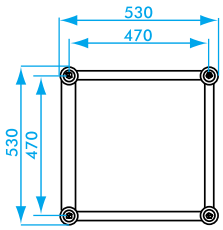

ALLOWABLE CANTILEVER LOAD FOR CT-010 SLEEVE BLOCK	
lenght (L)	B100RV CPL (kg)
1	3141
1,5	2383
2	1911
2,5	1587
3	1351
3,5	1169
4	1025
4,5	907
5	808
5,5	724
6	651

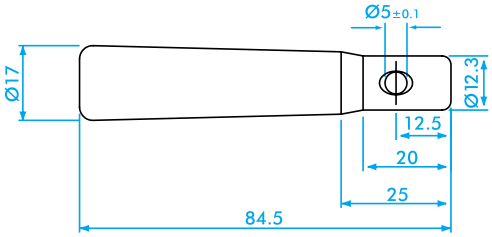

CCS7-703-CT

TECHNICAL SPECIFICATIONS CT TOWER	
max. height	20,00 m
max. loading chainhoist*	5000 kg
type mast sections	C52T
sleeveblock suitable for truss-series	S52F•V, S66R•V S100F and B100RV (with various sleeveblocks)
alloy alu parts	EN-AW 6082 T6
main tubes mast sections	60 x 5 mm
braces mast sections	30 x 3 / 48 x 3 mm
coupling system tower	CCS7 series

*) to be used with chainhoist only.

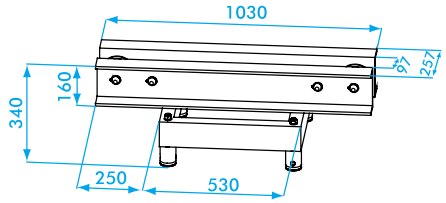

Top section. CT-009

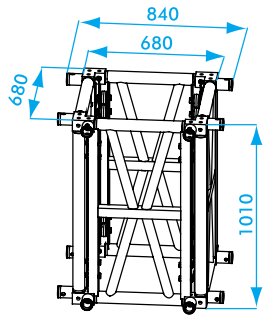

Sleeveblock. CT 010-4--B100

CT SERIES STANDARD AVAILABLE LENGTHS										
Meters	0,5	1,00	1,50	2,00	2,50	3,00	3,50	4,00	5,00	AVARAGE WEIGHT PER METER = 16,5 KG
Feet	1,64	3,28	4,92	6,56	8,20	9,84	11,48	13,12	16,4	AVARAGE WEIGHT IN POUNDS PER FEET = 11,1 LBS

Photos : Rohr Autohaus-Optimierung, Germany
Project : Highlight Platz Grasser

Advertisement towers
Outdoor advertisement is a perfect medium to bring your product or message to the attention of a large public.
In close cooperation with Rohr Autohaus from Germany, Prolyte has developed a range of towers and pylons for this type of outdoor mass communication.

Reliable constructions
Outdoor advertisement towers or billboards constructed from truss, require some extra attention in regard to set up and structural calculations.
Environmental factors, such a wind force have to be calculated and further, the stability of the structure needs to be guaranteed. Prolyte offers a range of standard sizes of triangular as well as square advertisement towers, which all comply with the applicable regulations and standards.

Based on standard truss systems
The standard advertisement tower constructions from Prolyte comprises of:
- Triangular towers up to 12 m. height, constructed from H40V truss
- Triangular and Square towers from 6-10 m. height, constructed from X&H30 en H40 truss
- Stand alone pylons, up to 10 m. height constructed from S66 and S52 truss.

The three-sided advertisement space amounts 2,5 x 2,5 m. each.

For more information, please contact Customer Services at Prolyte.